KS1491,2,3,5,8WLL
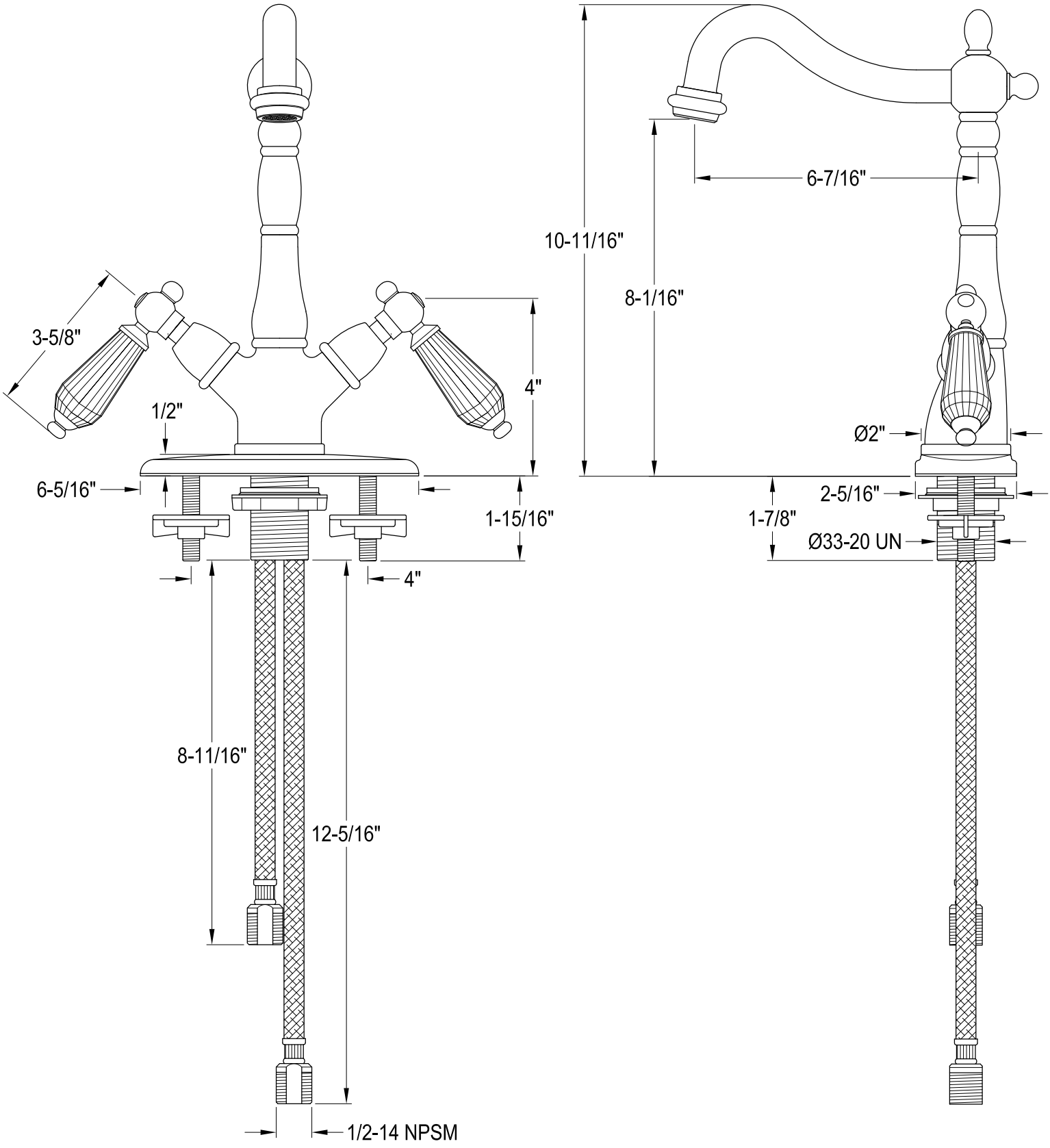
Twin Handles Vessel Sink Faucet